SZB - na visokim frekv.

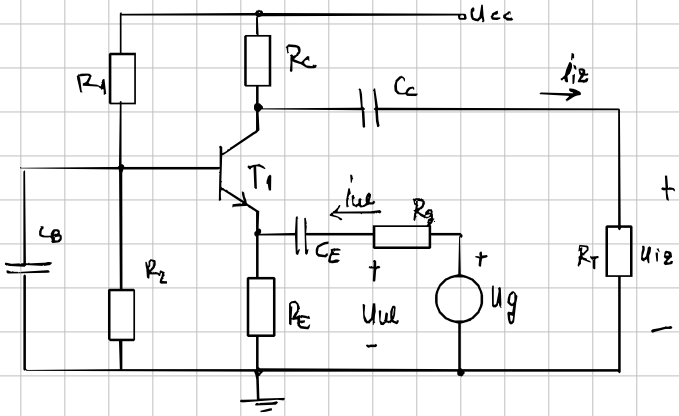

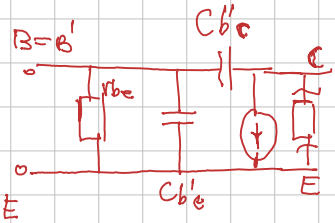

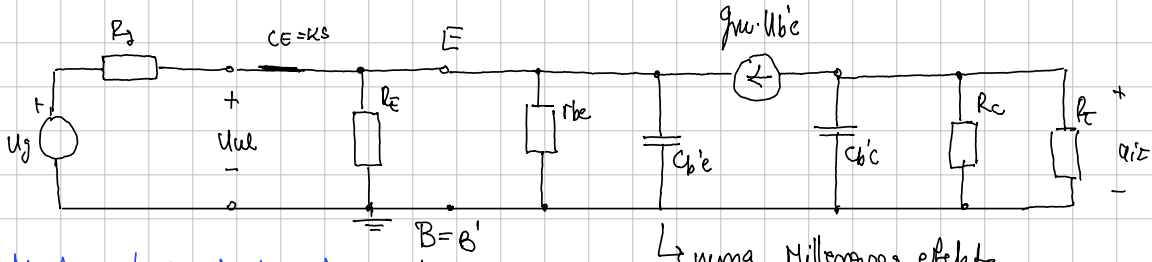

↳ nema Millerovog efekta

Nadomještanje strujnog izv. (ulazni kr.) $r_{bb'}=0$

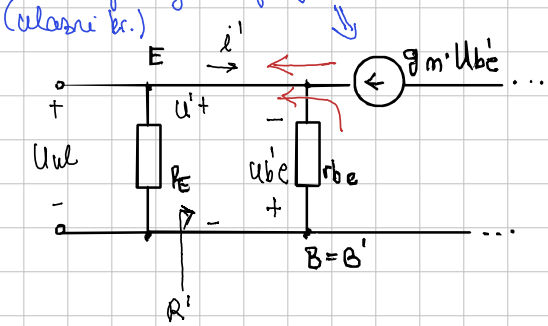

$$R' = \frac{u'}{i'} = \frac{-U_{b'e}}{-g_m \cdot U_{b'e} + \left(-\frac{U_{b'e}}{r_{b'e}}\right)} = \frac{1}{g_m + \frac{1}{r_{be}}}$$

$$\Downarrow$$

$$R' = R_{ul}$$

(ili sa $R' = \left(r_{be} \parallel \frac{1}{g_m}\right)$)

$$R_{ul} = \frac{r_{b'e}}{g_m \cdot r_{b'e} + 1}$$

Izlazni kr:

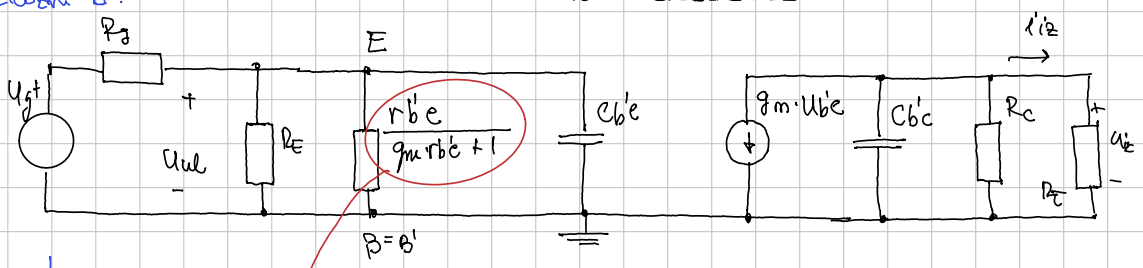

↳ konačan izgled nadomjesne sheme

$$\frac{r_{b'e}}{g_m \cdot r_{b'e}+1} = \frac{r_{b'e}}{1+\frac{I_{CQ}}{U_T}\cdot r_{b'e}} = \frac{r_{b'e}}{1+\frac{\beta \cdot I_{BQ}}{U_T}\cdot r_{b'e}} = \frac{r_{b'e}}{1+\beta\cdot\frac{1}{\cancel{r_{b'e}}}\cdot\cancel{r_{b'e}}}$$

$$\Rightarrow \frac{r_{b'e}}{g_m \cdot r_{b'e}+1} = \frac{r_{b'e}}{h_{fe}+1}$$

Naponsko pojačanje

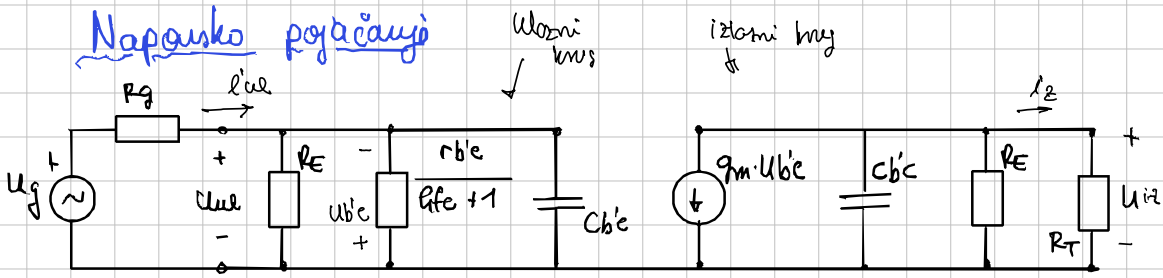

$$A_v(j\omega) = \frac{u_{iz}}{u_{ul}} = A_{v0} \cdot \frac{1}{1+j\frac{\omega}{\omega_{ul}}} \cdot \frac{1}{1+j\frac{\omega}{\omega_{iz}}}$$

$$A_{v0} = \frac{u_{iz}}{u_{ul}} = \frac{-g_m \cdot u_{b'e}\,(R_C \| R_T)}{-u_{b'e}} = g_m (R_C \| R_T) \rightarrow A_{v0} = g_m (R_C \| R_T)$$

$$\boxed{\omega_{ul}} = \frac{1}{\tau_{ul}} = {}^{*}(u_l = K.S.) = \frac{1}{C_{b'e} \cdot \emptyset} = \infty$$

nemamo doprinos ulaznog kruga

ne postoji komponenta za pol na ulazu kada se računa naponsko pojačanje

$$\boxed{\omega_{iz}} = \frac{1}{\tau_{iz}} = \frac{1}{C_{b'c} \cdot (R_C \| R_T)}$$

→ zbog $u_{ul} = K.S.$ → ne postoji $u_{b'e}$
⇒ nema strujnog izvora

$$\Rightarrow \boxed{A_v(j\omega) = A_{v0} \cdot \frac{1}{1+j\frac{\omega}{\omega_{iz}}}}$$

▷ Naponsko pojačanje s obzirom na generator $A_{vg} = A_{vg0} \cdot \frac{1}{\left(1+j\frac{\omega}{\omega_{ul}}\right)\left(1+j\frac{\omega}{\omega_{iz}}\right)}$

$$A_{vg0} = \frac{u_{iz}}{u_{ul}} \cdot \frac{u_{ul}}{u_g} = \underset{\substack{\| \\ g_m(R_C \| R_T)}}{A_{v0}} \cdot \frac{\cancel{i_{ul}} \cdot \left(R_E \| \frac{r_{b'e}}{1+h_{fe}}\right)}{\cancel{i_{ul}} \cdot \left(R_g + R_E \| \frac{r_{b'e}}{1+h_{fe}}\right)} \Rightarrow A_{vg} = A_{v0} \frac{R_E \| \frac{r_{b'e}}{1+h_{fe}}}{R_g + R_E \| \frac{r_{b'e}}{1+h_{fe}}}$$

$$\boxed{\omega_{ul}} = \frac{1}{\tau_{ul}} = \frac{1}{C_{ul} \cdot \left(R_g \| R_E \| \frac{r_{b'e}}{h_{fe}+1}\right)}$$

⇒ sada postoji

$$\boxed{\omega_{iz}} \quad \omega_{iz} = \frac{1}{\tau_{iz}} = \frac{1}{C_{b'e}\,(R_C \| R_T)}$$

Uz konačni R_g ⟶ utječe i vremenska konstanta ul. kruga

$$\omega_g = \min\{\omega_{ul}, \omega_{iz}\} = \min\left\{\frac{1}{\tau_{ul}}, \frac{1}{\tau_{iz}}\right\}$$ (razlika 4x!)

⇒ Nema Millerovog efekta → obje su konstante

Zadatak 3 iz ZZV)

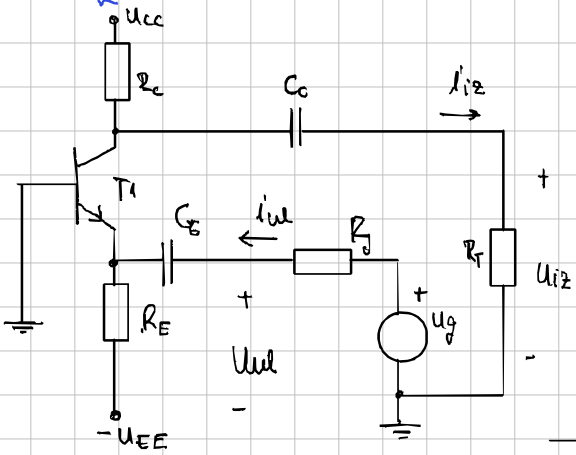

$U_{CC} = U_{EE} = 15V$

$R_g = 900\Omega \quad R_C = 2k\Omega \quad R_T = 1{,}2k\Omega$

$\beta \approx h_{fe} = 100$

$U_\gamma = 0.7V \quad U_T = 25mV$

$C_{b'e} = 50pF \quad C_{b'c} = 2{,}5pF$

$r_{bb'} = 0 \quad r_{ce} = 0$

$R_E = ? \quad I_{CQ} = 3mA$

$A_V = \frac{U_{iz}}{U_{ul}} = ? \quad A_I = \frac{I_{iz}}{I_{ul}}$

Statika:

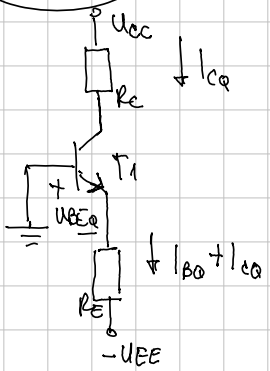

$\rightarrow I_{BQ} = \frac{I_{CQ}}{\beta} = \frac{3mA}{100} \Rightarrow \boxed{I_{BQ} = 30\mu A}$

$+U_{BEQ} + I_{BQ}(1+\beta)R_E - U_{EE} = 0$

$R_E = \frac{U_{EE} - U_{BEQ}}{I_{BQ}(1+\beta)} \rightarrow \boxed{R_E = 4719.5\Omega}$

$r_{b'e} = \frac{U_T}{I_{BQ}} \Rightarrow \boxed{r_{b'e} = 833.3\Omega}$

$g_m = \frac{I_{CQ}}{U_T} \Rightarrow \boxed{g_m = 0.12 A/V}$

Dinamika

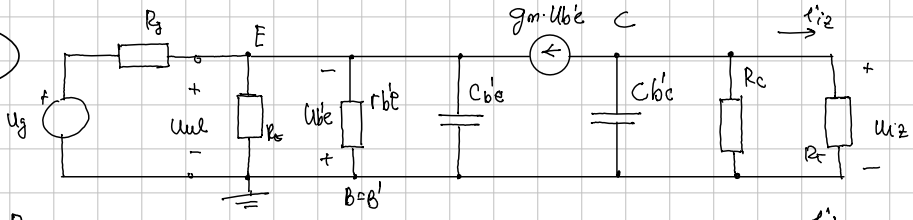

$\Rightarrow$

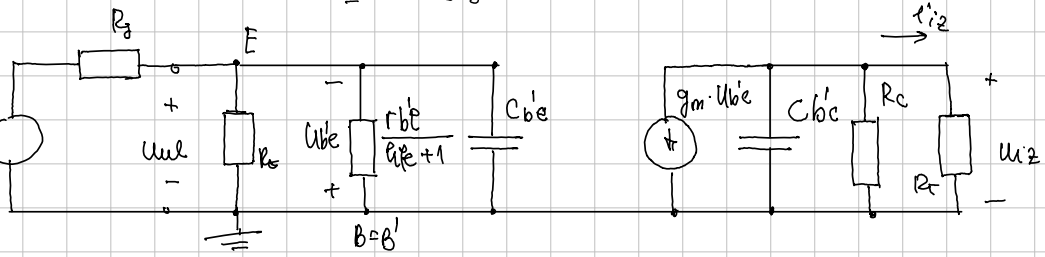

$A_V(j\omega) = A_{V0} \cdot \frac{1}{1 + j\frac{\omega}{\omega_{iz}}} \Rightarrow A_{V0} = \frac{\cancel{-}g_m \cdot \cancel{U_{b'e}}(R_C \| R_T)}{\cancel{-U_{b'e}}} = g_m(R_C \| R_T)$

$A_{V0} = 90$

$\omega_{iz} = \frac{1}{\tau_{iz}} = \frac{1}{C_{b'c} \cdot (R_C \| R_T)} = \dots = 533.3 \times 10^6 \, rad/s$

$\rightarrow f_{iz} = 84.88 \, MHz = f_g$ jer nema U_{ul}

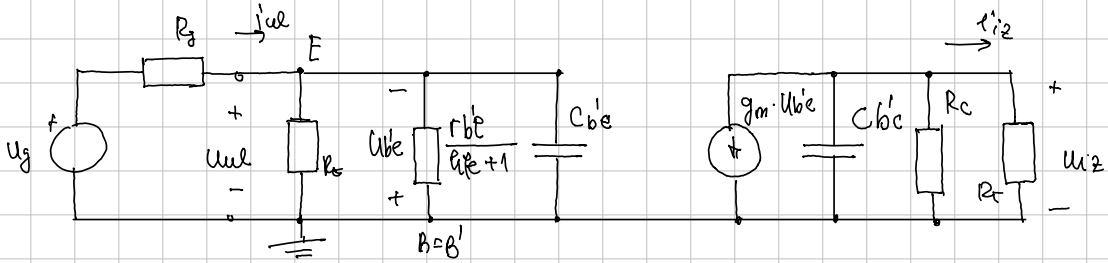

$$A_I(j\omega) = A_{I0} \cdot \frac{1}{\left(1 + j\frac{\omega}{\omega_{ul}}\right)} \cdot \frac{1}{1 + j\frac{\omega}{\omega_{iz}}} \Rightarrow A_{I0} = \frac{i_{iz}}{i_{ul}}$$

$$A_{I0} = \underbrace{\frac{u_{iz}}{R_T} \cdot \frac{R_E \parallel \frac{r_{b'e}}{h_{fe}+1}}{u_{ul}}}_{A_{V0}} = A_{V0} \cdot \frac{R_E \parallel \frac{r_{b'e}}{h_{fe}+1}}{R_T} = \dots \Rightarrow A_{I0} = 0.618$$

$$\omega_{I\,ul} = \frac{1}{j_{ul}} = {}^{*}(\text{odspojamo } i_{ul}) = \frac{1}{C_{b'e}\left(R_E \parallel \frac{r_{b'e}}{h_{fe}+1}\right)} = \dots = 2.43 \times 10^{9}\ \text{rad/s}$$

$$f_{ul} = 386\ \text{MHz}$$

$$\omega_{I\,iz} = \frac{1}{j_{iz}} = \frac{1}{C_{b'c} \cdots \text{isto} \cdots} = \dots = 533{,}3 \times 10^{6}\ \text{rad/s}$$

$$\Rightarrow f_{iz} = 84.9\ \text{MHz}$$

→ gornja gran. f je ona MANJA (BLIŽA SR. FREKV)

ako $84.9 \times 4 = 340 \cdots$ ugl $\nparallel$ $f_{iz} \times 4 \leq f_{ul} \rightarrow \boxed{f_g = f_{iz}}$